Sharper Image Cube Mobile Projector



Pocket LED HDMI MHL

Display Type	[redacted] -		
Ansi-Lumen	-	Screen	Lux (bei 200 cm Screen)
Contrast	1000:1 full on/off		-
Black Level	-		-
Offset	-		
Resolution	WVGA 854 x 480 409.920 Pixel		
Video Modes	Pal, SECAM, NTSC, HDTV 720p, 1080i, EDTV 480p, 576p		
Application	Game-Portabel | Very portable, small-screen projections. Very narrow picture width and rooms with very little light.		
Light Source	LED		
Light Life	20000 h.		
Operating Costs	0,00 € LED		
Focus	Manual		
Zoom	No Zoom		
Objective	-		
Throw Ratio	1,99:1		
Audio	-		
Connections	HDMI mit MHL in Micro SD Slot in		
Ceiling Mounting	-		
Power	-		
Size WxHxD	50,8 x 48,3 x 50,8 mm (2"x1,9"x2") 0,12 L/dm³		
Operating Noise	-		

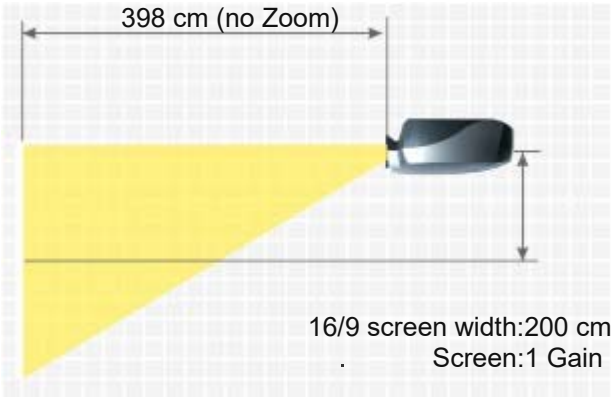

Weight	0,140 kg / 0,31 lbs.
Keystone	-
Illumination	85%
Frequenz	-
Foot-Lamberts	-
	-
Features	■ Micro SD slot
Status	2016 Discontinued (EOL) // Last update of the data: 2023-08-04
Data	

SHARPER IMAGE CUBE MOBILE P

More Details

HCinema

https://www.projector-database.com/pro/shaperimageCubeMobileProjector-en.html

Due to our ongoing commitment to continuously improve the quality of our projector database, this brochure is also subject to change without notice. HCinema is not responsible for any errors or omissions contained in product descriptions.

PROJECTOR