Metropolis Image Two



Display Type	 CRT 4/3		
Ansi-Lumen	Projector 150	Screen 49 Lux (bei 203 cm Screen)	
Contrast	-	-	
Black Level	-	-	
Offset	-		
Resolution	-		
Video Modes	PAL, NTSC 3,58, NTSC 4,43-System		
Application	CRT Projection | Very narrow picture width and rooms with very little light.		
Light Source	CRT Röhre		
Light Life	ca. 10000 - 20000 h. (je nach Anwendung)		
Operating Costs	-		
Focus	Manual		
Zoom	No Zoom		
Objective	Hybrid		
Throw Ratio	-		
Audio	-		
Connections	S-Video in 5 x BNC in D-sub 15pin in		
Ceiling Mounting	Yes		
Power	450W		
Size WxHxD	129 x 257,5 x 332,8 mm (5,1"x10,1"x13,1") 11,01 L/dm³		
Operating Noise	-		

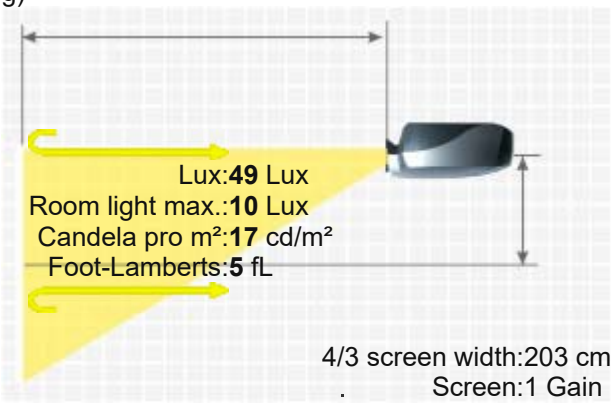

Weight	38,00 kg / 83,78 lbs.
Keystone	-
Illumination	-
Frequenz	H-sync: 15,0-16,0 kHz V-sync: 50-60 Hz
Foot-Lamberts	5 fL / max. 107 cm screen width 17 cd/m²
Features	■ chamber filter ■ gamma correction ■ automatically switch timer on or off
In Test	-
Status	- Discontinued (EOL) // Last update of the data: 2023-08-04
Data	

More Details

HCinema

https://www.projector-database.com/pro/metropolisimage2-en.html

METROPOLIS IMAGE TWO

Due to our ongoing commitment to continuously improve the quality of our projector database, this brochure is also subject to change without notice. HCinema is not responsible for any errors or omissions contained in product descriptions.