Jay Tech Mini Projektor



Pocket LED

Display Type	1 x 0,44" LCOS Panel VGA 4/3 Liquid Crystal on Silicon (LCOS)		
Ansi-Lumen	Projector: 10	Screen: 3 Lux (bei 200 cm Screen)	
Contrast	-	-	
Black Level	-	-	
Offset	-		
Resolution	VGA 640 x 480 307.200 Pixel		
Video Modes	--		
Application	Game-Portabel | Very portable, small-screen projections. Very narrow picture width and rooms with very little light.		
Light Source	LED		
Light Life	-		
Operating Costs	0,00 € LED		
Focus	Manual		
Zoom	No Zoom		
Objective	-		
Throw Ratio	-		
Audio	1W		
Connections	D-sub 15pin in Cinch Video in Cinch Stereo in		
Ceiling Mounting	-		
Power	-		
Size WxHxD	95 x 43 x 84 mm (3,7"x1,7"x3,3") 0,34 L/dm³		
Operating Noise	-		
Weight	0,190 kg / 0 lbs.		
Keystone	-		
Illumination	-		
Frequenz	-		
Foot-Lamberts	- -		
Features	-		
Status	2015 Discontinued (EOL) // Last update of the data: 2024-04-11		
Data			

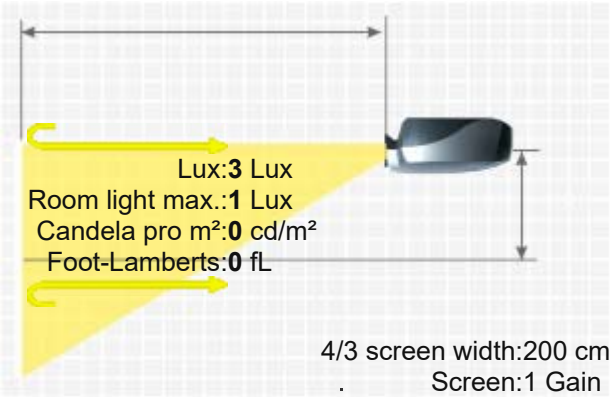

JAY TECH MINI PROJEKTOR

More Details

HCinema

https://www.projector-database.com/pro/jaytechMiniProjektor-en.html

Due to our ongoing commitment to continuously improve the quality of our projector database, this brochure is also subject to change without notice. HCinema is not responsible for any errors or omissions contained in product descriptions.