Fuss FP-367A



Brief Introduction Beta 2.5	A brief introduction to the Fuss FP-367A. The DLP LED projector has a WXGA 1280 x 800 resolution and 216 Ansi lumens. The manufacturer Fuss states a service life of 30,000 hours, which is equivalent to over 20.5 years at 4 hours per day. Thanks to the short-throw projection ratio of just 0.2:1, the projector does not stand still in the room. For a 2m wide image, the projector only needs to be 40 cm away from the screen. As Fuss specifies the brightness of the projector in lumens, we have calculated an approximate ansi lumen value in this case. Even 1080P video signals are no problem for the projector.
Display Type	DLP Chip WXGA 16/10 Ti Digital Light Processing Chip
Ansi-Lumen	Projector: 216 / 3600 Lumen — Screen: 86 Lux (bei 200 cm Screen)
Contrast	Projector: - — Screen: -
Black Level	Projector: - — Screen: -
Offset	-
Resolution	WXGA 1280 x 800 1.024.000 Pixel
Video Modes	Pal, SECAM, NTSC, HDTV 720p, 1080i, 1080p, EDTV 480p, 576p
Disc Recognition	DVD | HD Blu-ray (komprimiert) | ~~3D Blu-ray~~ | ~~4K UHD Blu-ray~~
3D Compatibility	Side-by-Side | Top-and-Bottom Frame Sequential (3D Ready)
Application	Short Distance | Very narrow picture width and rooms with very little light.
Light Source	LED
Light Life	30000 h.
Operating Costs	0,00 € LED
Focus	Manual
Zoom	No Zoom
Objective	-
Throw Ratio	0,2:1
Audio	-
Connections	2 x HDMI in Cinch Video in Cinch Stereo in Mini Jack Audio out USB in SPDIF RJ45 in
Ceiling Mounting	Yes
Power	-

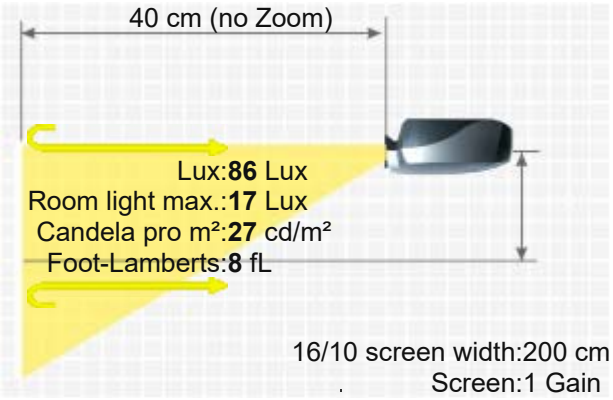

FUSS FP-367A

Size WxHxD	417 x 125 x 360 mm (16,4"x4,9"x14,2") 18,77 L/dm³
Operating Noise	-
Weight	5,40 kg / 11,02 lbs.
Keystone	-
Illumination	-
Frequenz	-
Foot-Lamberts	8 fL / max. 149 cm screen width 27 cd/m²
Features	■ Full HD 1080P compatible ■ Wi-Fi network compatible. ■ Lan network compatible. ■ Short-throw projector -
Status	2018 Current model // Last update of the data: 2024-10-02 Created: 2019-05-07 19:23:01
Data	 
More Details	HCinema https://www.projector-database.com/pro/fussfp367a-en.html

Due to our ongoing commitment to continuously improve the quality of our projector database, this brochure is also subject to change without notice. HCinema is not responsible for any errors or omissions contained in product descriptions.