Benq LX720





BENQ LX720

Brief Introduction Beta 2.5	The Benq model LX720 is a DLP laser projector with XGA 1024 x 768 resolution and a contrast of 100000:1. The laser gives it a service life of 20000 hours, which is over 13.7 years with a daily viewing time of 4 hours. With the lens shift function, the projector can be positioned very freely. The model offers a microphone jack plug and 10W speakers, so no additional audio equipment is required for presentations or training courses. 551 cm image width, the projector will be able to illuminate well. Rooms with residual light can be created by the projector with a smaller image width, we recommend a maximum of 367 cm. With the HDMI MHL port, the smartphone image can be transmitted to the projector in Full HD at 60 Hz by screen mirroring and the smartphone is charged at the same time. The projector can also play 1080P without any problems. On the market since 2018, the model is no longer offered by the manufacturer Benq.
Display Type	1 x 0,55" DC3 DLP Chip XGA 4/3 Ti Digital Light Processing Chip
Ansi-Lumen	Projector: 4000 / Screen: 1333 Lux (bei 200 cm Screen)
Contrast	Projector: 100000:1 full on/off / Screen: 100000:1 full on/off
Black Level	Projector: 0,0400 min. Lumen / Screen: 0,013 min. Lumen
Lens shift	Vert.: +90% --66%
Resolution	XGA 1024 x 768 786.432 Pixel WUXGA 1920 x 1200 compressed
Video Modes	Pal, SECAM, NTSC, HDTV 720p, 1080i, 1080p, EDTV 480p, 576p
Application	Standard-Portabel | External training and company presentations, as well as product presentations. Wide screen width or rooms with plenty of light (over 200 lumens).
Light Source	Laser Articel Nr.: 5J.JJF06.001
Light Life	20000 h.
Operating Costs	0,00 € Laser
Focus	Manual
Zoom	Manual 1,5
Objective	-
Throw Ratio	1,82-2,81:1
Audio	1 x 10W
Connections	2x HDMI in(1xMHL) D-sub 15pin 2x in und out Cinch Video in Cinch Stereo in

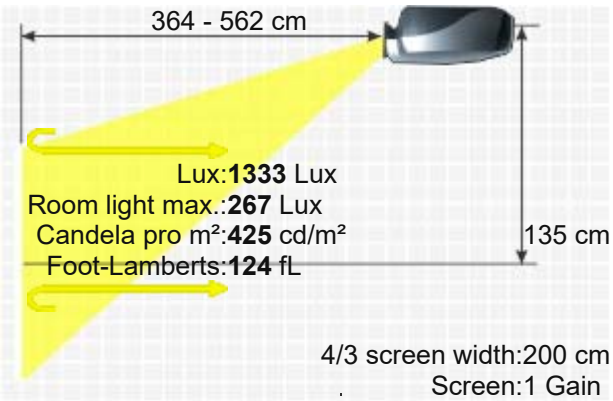

	Microphone in S-Video in Mini Jack Audio in und out USB in RS232C Din 9 pin in RJ45 in 12V Trigger out
Ceiling Mounting	Yes
Power	320W / 280W in Eco Mode
Size WxHxD	410 x 158 x 272 mm (16,1"x6,2"x10,7") 17,62 L/dm³
Operating Noise	33 / 29 dB in Eco Mode
Weight	5,60 kg / 11,02 lbs.
Keystone	Vert.: +/-30° Hori.: +/-30°
Illumination	-
Frequenz	H-sync: 15-102 kHz V-sync: 23-120 Hz
Foot-Lamberts	124 fL / max. 551 cm screen width 425 cd/m²
Features	■ Full HD 1080P compatible ■ Lens shift Funktion ■ Eco Mode ■ Kensington Slot ■ Lan network compatible.
Optional	Remote control original 5J.JJF06.001
Status	Order here: https://www.hcinema.de/lampen/shop-en.php?id=fro9002289 2018 Discontinued (EOL) // Last update of the data: 2023-09-20 Created: 2018-12-06 17:16:54

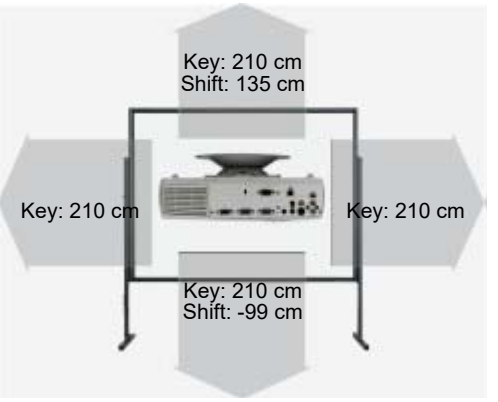

Data



More Details

https://www.projector-database.com/pro/benqlx720-en.html

Due to our ongoing commitment to continuously improve the quality of our projector database, this brochure is also subject to change without notice. HCinema is not responsible for any errors or omissions contained in product descriptions.