ACTO LX660



Brief Introduction Beta 2.5	The LX660 LCD has 3500 Ansi lumens, a contrast of 800:1 and an XGA 1024 x 768 resolution. The projector can illuminate a screen width of up to 515 cm thanks to its 3500 Ansi lumens. The projector can create rooms with residual light with a smaller image width, max. 343 cm is recommended. It was launched in 2009 and is no longer offered by the manufacturer ACTO.
Display Type	3 x 0,63" LCD TFT Panel XGA 4/3 Liquid Crystal Display
Projector Ansi-Lumen	3500
Contrast	800:1 full on/off
Black Level	4,3750 min. Lumen
Offset	-
Screen Ansi-Lumen	1167 Lux (bei 200 cm Screen)
Contrast	800:1 full on/off
Black Level	1,464 min. Lumen
Resolution	XGA 1024 x 768 786.432 Pixel
Video Modes	PAL, SECAM, NTSC, HDTV 720p, 1080i, EDTV 480p, 576p
Application	Standard-Portabel | External training and company presentations, as well as product presentations. Medium screen width or rooms with a little more ambient light, max. 200 lumens.
Light Source	230W NSH Lamp Articel Nr.: 3700161500
Light Life	3000 h. 4000 in Eco Mode
Operating Costs	-
Focus	Manual
Zoom	Manual 1,2
Objective	F=1,58-1,75 f=18,85-22,63 mm
Throw Ratio	1,47-1,77:1
Audio	7W Mono
Connections	D-sub 15 pin in und out S-Video in Cinch Video in RS232C Mini jack Stereo in
Ceiling Mounting	Yes
Power	310W
Size WxHxD	345 x 94 x 245 mm (13,6"x3,7"x9,6") 7,95 L/dm³
Operating Noise	34 / 29 dB in Eco Mode
Weight	3,20 kg / 7,05 lbs.
Keystone	Vert.: +/-30°
Illumination	85%
Frequenz	H-sync: 15-100 kHz V-sync: 50-100 Hz
Foot-Lamberts	108 fL / max. 515 cm screen width 370 cd/m²

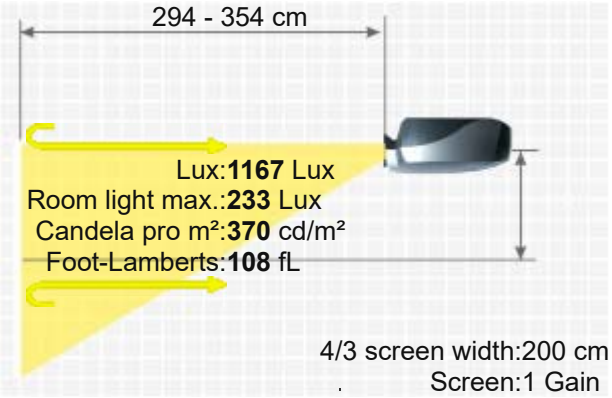

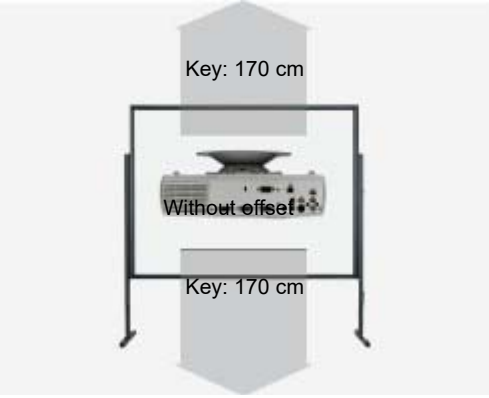

Features	■ Eco Mode ■ 24/7 continuous operation capable	
Optional	Bulb only	NLMP9000982
	Lamp original	3700161500
	Ceiling Mount 100-120	Halterung100
Status	Order here: https://www.hcinema.de/lampen/shop-en.php?id=n9001584	
Data	2009 Discontinued (EOL) // Last update of the data: 2023-08-04	
More Details	https://www.projector-database.com/pro/actolx660-en.html	

Due to our ongoing commitment to continuously improve the quality of our projector database, this brochure is also subject to change without notice. HCinema is not responsible for any errors or omissions contained in product descriptions.