ACTO LX643



3LCD Netzwerk USB

Brief Introduction Beta 2.5	A brief introduction to the ACTO LX643. The LCD projector has an XGA 1024 x 768 resolution and a contrast of 2000:1. The manufacturer ACTO specifies a lamp life of 4000 hours, which is over 5.5 years if enjoyed for two hours a day. A picture width of up to 485 cm is possible. However, the picture should be smaller in room light. We recommend max. 323 cm. Playing 1080P is also no problem for the projector. This model is no longer offered by ACTO.
Display Type	3 x 0,63" LCD TFT Panel XGA 4/3 Liquid Crystal Display

	Projector		Screen
Ansi-Lumen	3100		1033 Lux (bei 200 cm Screen)
Contrast	2000:1 full on/off		2000:1 full on/off
Black Level	1,5500 min. Lumen		0,517 min. Lumen

Offset	-
Resolution	XGA 1024 x 768 786.432 Pixel UXGA 1600 x 1200 compressed
Video Modes	Pal, SECAM, NTSC, HDTV 720p, 1080i, 1080p EDTV 480p, 576p
Application	Standard-Portabel | External training and company presentations, as well as product presentations. Medium screen width or rooms with a little more ambient light, max. 200 lumens.
Light Source	230W USHIO Lamp Articel Nr.: 3700161500
Light Life	4000 h. 5000 h. in Eco Mode
Operating Costs	-
Focus	Manual
Zoom	Manual 1,2
Objective	F=2,3-2,5 f=18,82-22,60 mm
Throw Ratio	1,47-1,77:1
Audio	2 x 3W
Connections	D-sub 15pin in und out Cinch Video in S-Video in Mini Jack Audio in und out USB in RJ45 in
Ceiling Mounting	Yes
Power	280W
Size WxHxD	327 x 87 x 241 mm (12,9"x3,4"x9,5") 6,86 L/dm³
Operating Noise	34 / 29 dB in Eco Mode

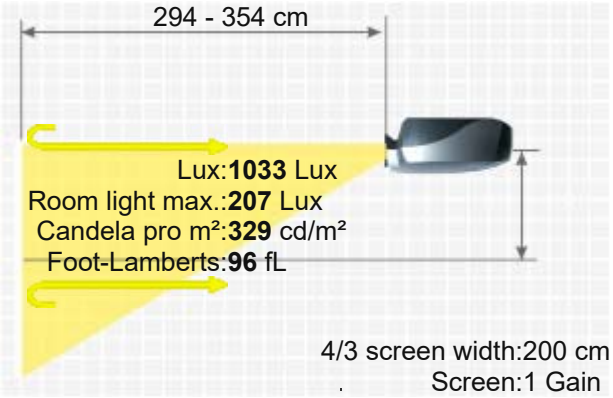

Weight	2,90 kg / 6,39 lbs.
Keystone	-
Illumination	85%
Frequenz	H-sync: 15-100 kHz V-sync: 50-100 Hz

ACTO LX643

Foot-Lamberts	96 fL / max. 485 cm screen width
	329 cd/m²
Features	■ Full HD 1080P compatible ■ Eco Mode ■ Lan network compatible.
Status Data	2012 Discontinued (EOL) // Last update of the data: 2023-08-04
More Details	https://www.projector-database.com/pro/actolx643-en.html

Due to our ongoing commitment to continuously improve the quality of our projector database, this brochure is also subject to change without notice. HCinema is not responsible for any errors or omissions contained in product descriptions.