ACTO DX330



ACTO DX330

Brief Introduction Beta 2.5	The standard portable DX330 DLP projector from ACTO has 3500 Ansi lumens, a contrast of 2000:1 and an XGA 1024 x 768 resolution. An image width of up to 515 cm is possible as the projector has 3500 Ansi lumens. The projector can create rooms with residual light with a smaller image width, we recommend a maximum of 343 cm. Furthermore, the projector can play 1080P without any problems. The model built in 2010 is no longer offered by ACTO.
Display Type	1 x 0,55" DLP Chip XGA 4/3 Ti Digital Light Processing Chip
Ansi-Lumen	Projector: 3500 / Screen: 1167 Lux (bei 200 cm Screen)
Contrast	Projector: 2000:1 full on/off / Screen: 2000:1 full on/off
Black Level	Projector: 1,7500 min. Lumen / Screen: 0,584 min. Lumen
Offset	-
Resolution	XGA 1024 x 768 786.432 Pixel SXGA 1280 x 1024 compressed
Video Modes	PAL, SECAM, NTSC, HDTV 720p, 1080i, 1080p EDTV 480p, 576p
Application	Standard-Portabel | External training and company presentations, as well as product presentations. Medium screen width or rooms with a little more ambient light, max. 200 lumens.
Light Source	260W UHP Lamp
Light Life	3000 h.
Operating Costs	-
Focus	Manual
Zoom	Manual 1,2
Objective	-
Throw Ratio	1,77-2,13:1
Audio	-
Connections	2 x D-sub 15 pin in S-Video in Cinch Video in USB RS232C
Ceiling Mounting	Yes
Power	320W
Size WxHxD	271 x 90 x 223 mm (10,7"x3,5"x8,8") 5,44 L/dm³
Operating Noise	32dB
Weight	2,70 kg / 5,95 lbs.
Keystone	Vert.: +/-15°
Illumination	85%
Frequenz	H-sync: 15-100 kHz V-sync: 43-120 Hz
Foot-Lamberts	108 fL / max. 515 cm screen width 370 cd/m²

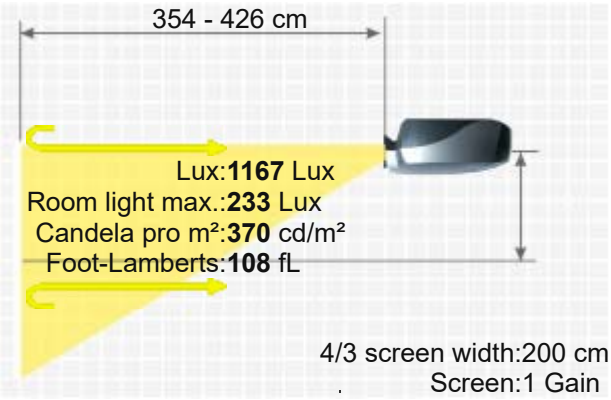

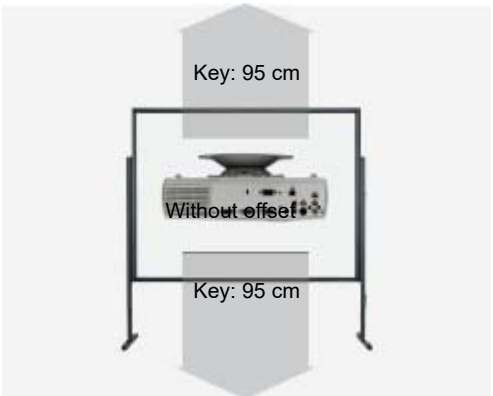

ACTO DX330

Features	■ Full HD 1080P compatible -
Status Data	2010 Discontinued (EOL) // Last update of the data: 2023-08-04
More Details	HCinema https://www.projector-database.com/pro/actodx330-en.html

Due to our ongoing commitment to continuously improve the quality of our projector database, this brochure is also subject to change without notice. HCinema is not responsible for any errors or omissions contained in product descriptions.