ACTO DS219



Brief Introduction Beta 2.5	The ACTO DS219 3D DLP projector has 3200 Ansi lumens, a contrast of 3500:1 and an SVGA 800 x 600 resolution. The manufacturer ACTO specifies a lamp life of 4000 hours, which is over 5.5 years with a daily viewing time of 2 hours. The projector can illuminate a picture width of up to 493 cm with its 3200 Ansi lumens. In room light, however, the image width should ideally be less than 329 cm. The model built in 2012 is no longer offered by ACTO.
Display Type	1 x 0,55" DLP Chip SVGA 4/3 Ti Digital Light Processing Chip

	Projector	Screen
Ansi-Lumen	3200	1067 Lux (bei 200 cm Screen)
Contrast	3500:1 full on/off	3500:1 full on/off
Black Level	0,9143 min. Lumen	0,305 min. Lumen

Offset	-
Resolution	SVGA 800 x 600 480.000 Pixel UXGA 1600 x 1200 compressed
Video Modes	Pal, SECAM, NTSC, HDTV 720p, 1080i, EDTV 480p, 576p
3D Compatibility	Frame Sequential (3D Ready)
Application	Standard-Portabel | External training and company presentations, as well as product presentations. Medium screen width or rooms with a little more ambient light, max. 200 lumens.
Light Source	190W UHP Lamp
Light Life	4000 h. 6000 h. in Eco Mode
Operating Costs	-
Focus	Manual
Zoom	Manual
Objective	-
Throw Ratio	-
Audio	2 x 3W Stereo
Connections	D-sub 15pin Cinch Video in S-Video in USB Typ B in Mini Jack Audio in und out RS232C Din 9 pin in
Ceiling Mounting	Yes
Power	250W
Size WxHxD	273 x 92,5 x 222,5 mm (10,7"x3,6"x8,8") 5,58 L/dm³
Operating Noise	32dB
Weight	2,50 kg / 5,51 lbs.
Keystone	Vert.: +/-40°
Illumination	85%
Frequenz	H-sync: 15-100 kHz V-sync: 50-80 Hz

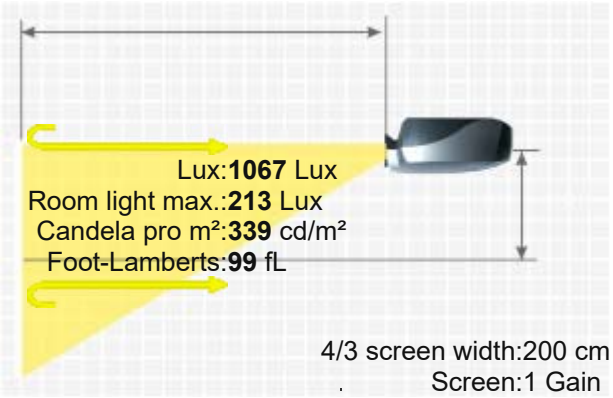

ACTO DS219

Foot-Lamberts	99 fL / max. 493 cm screen width
	339 cd/m²
Features	■ Eco Mode
Status	2012 Discontinued (EOL) // Last update of the data: 2023-08-04
Data	

More Details

https://www.projector-database.com/pro/actods219-en.html

Due to our ongoing commitment to continuously improve the quality of our projector database, this brochure is also subject to change without notice. HCinema is not responsible for any errors or omissions contained in product descriptions.