3T 727 1





Brief Introduction Beta 2.5	A brief introduction to the 3T 727 1 The home cinema LCD projector has a WPAL 1024 x 576 resolution and a contrast of 700:1. Horizontal and vertical keystone correction makes setting up the picture childs play. The projector can illuminate a picture width of 393 cm well. However, if room light is available, the picture width should ideally not exceed 262 cm. It is no longer offered by the manufacturer 3T.
Display Type	3 x 0,7" LCD TFT Panel WPAL 16/9 Liquid Crystal Display
Ansi-Lumen	Projector: 1500 / Screen: 647 Lux (bei 203 cm Screen)
Contrast	Projector: 700:1 full on/off / Screen: 700:1 full on/off
Black Level	Projector: 2,1429 min. Lumen / Screen: 0.927 min. Lumen
Offset	-
Resolution	WPAL 1024 x 576 489.824 Pixel
Video Modes	PAL, SECAM
Disc Recognition	DVD | ~~HD Blu-ray~~ | ~~3D Blu-ray~~ | ~~4K UHD Blu-ray~~
Application	Homeciname | Small screen width, rooms with very little ambient light below 100 lumens.
Light Source	132W Lamp
Light Life	-
Operating Costs	-
Focus	Manual
Zoom	Manual 1,2
Objective	F=2,0-2,3 f=21,8-25,2 mm
Throw Ratio	1,41-1,63:1
Audio	-
Connections	DVI D-sub 15pin in YUV in Cinch Video in S-Video in
Ceiling Mounting	Yes
Power	-
Size WxHxD	329 x 106 x 255 mm (13"x4,2"x10") 8,89 L/dm³
Operating Noise	35dB
Weight	3,00 kg / 6,61 lbs.
Keystone	Vert.: +/-40° Hori.: +/-15°
Illumination	90%
Frequenz	H-sync: 15-69 kHz V-sync: 43-85 Hz
Foot-Lamberts	60 fL / max. 393 cm screen width 206 cd/m²
Features	■ Picture-in-Picture ■ Remote control with laser pointer

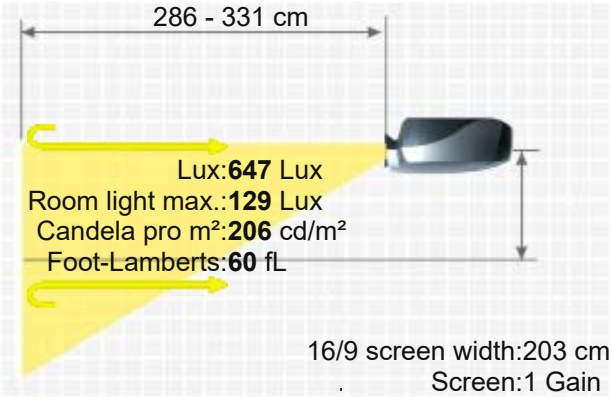

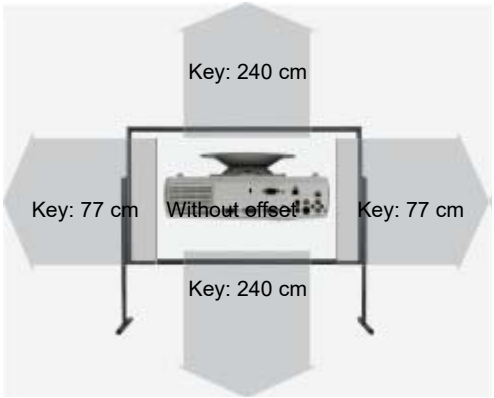

Status - Discontinued (EOL) // Last update of the data: 2023-08-04
Data

More Details



HCinema
https://www.projector-database.com/pro/3T7271-en.html

Due to our ongoing commitment to continuously improve the quality of our projector database, this brochure is also subject to change without notice. HCinema is not responsible for any errors or omissions contained in product descriptions.